SAMUEL HEATH

Product Number: V7B2AXLL9

Description: 1/2" Concealed thermostatic shower - 2 volume controls

Finishes Available

Chrome Plate

Polished Nickel

Non Lacquered Brass

Satin Nickel (US15)

Stainless Steel with Matt Black

Urban Brass

City Bronze

Matt Black Chrome

Urban Brass Matt Lacquered

Antique Brass Matt

Antique Brass Gloss

Amber Brass

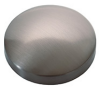
Anthracite

Control Options Available

Specification Drawing

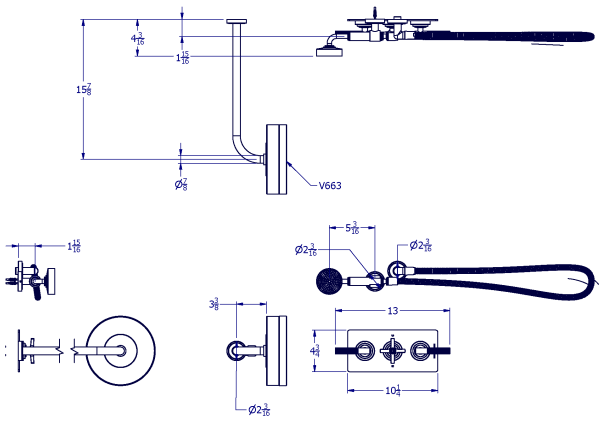

UK Customer Service
Leopold Street
Birmingham
B12 0UJ
Tel: +44 121 766 4200
Email: info@samuel-heath.com

US Customer Service
Federal I.D. No. 58-1504682
Email: usa@samuel-heath.com

Specification Enquiries
Design Centre Chelsea Harbour
1st Floor, North Dome, London
SW10 0XE
Tel: 020 7352 0249
Email: showroom@samuel-heath.com