SAMUEL HEATH

Product Number: V6B1AXM9

Description: 1/2" Concealed thermostatic shower - 2 volume controls

Finishes Available

Chrome Plate

Polished Nickel

Non Lacquered Brass

Antique Gold

Satin Nickel (US15)

City Bronze

Country Bronze

Brushed Gold Gloss

Brushed Gold Matt

Brushed Gold Unlacquered

Antique Brass Matt

Antique Brass Gloss

Specification Drawing

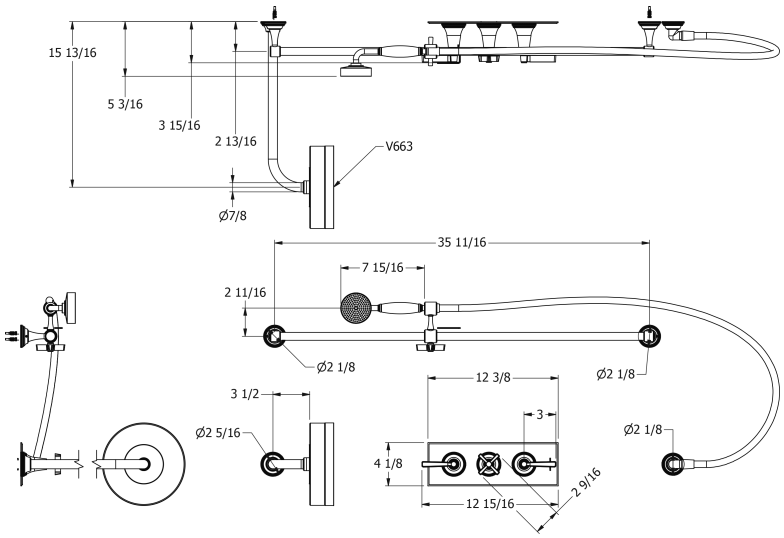

Kit Components

Aml ass

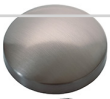
A te

V602-TM

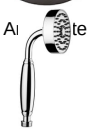
V654-A

V6KA620-B

V663

V6KA640

V670-X

V941

UK Customer Service
Leopold Street
Birmingham
B12 0UJ
Tel: +44 121 766 4200
Email: info@samuel-heath.com

US Customer Service
Federal I.D. No. 58-1504682
Email: usa@samuel-heath.com

Specification Enquiries
Design Centre Chelsea Harbour
1st Floor, North Dome, London
SW10 0XE
Tel: 020 7352 0249
Email: showroom@samuel-heath.com