SAMUEL HEATH

Product Number: V6K47X

Description: 3 Hole wall mounted bath filler

Standards

LP Min 0.5 bar · water saving · WRAS APPROVED PRODUCT

Flow rates

Litres/Min	0.1 Bar	0.5 Bar	1.0 Bar	2.0 Bar	3.0 Bar	4.0 Bar	5.0 Bar
		37.4	54.7	83.2	96.0	107.4	107.4

Flow rate data provided is indicative of each product and is given in open outlet conditions. Installation design, external connections and fittings not supplied may affect the data provided.

Finishes Available

Chrome Plate · Polished Nickel · Non Lacquered Brass · Antique Gold · Stainless Steel Finish · City Bronze · Country Bronze · Brushed Gold Gloss · Brushed Gold Matt

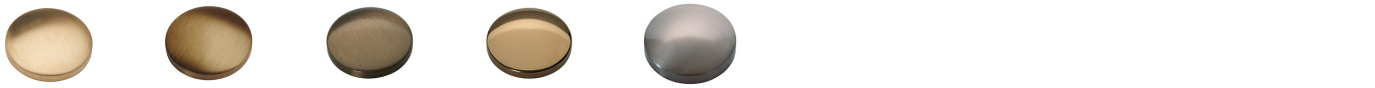

Brushed Gold Unlacquered · Antique Brass Matt · Antique Brass Gloss · Amber Brass · Anthracite

Control Options Available

Specification Drawing

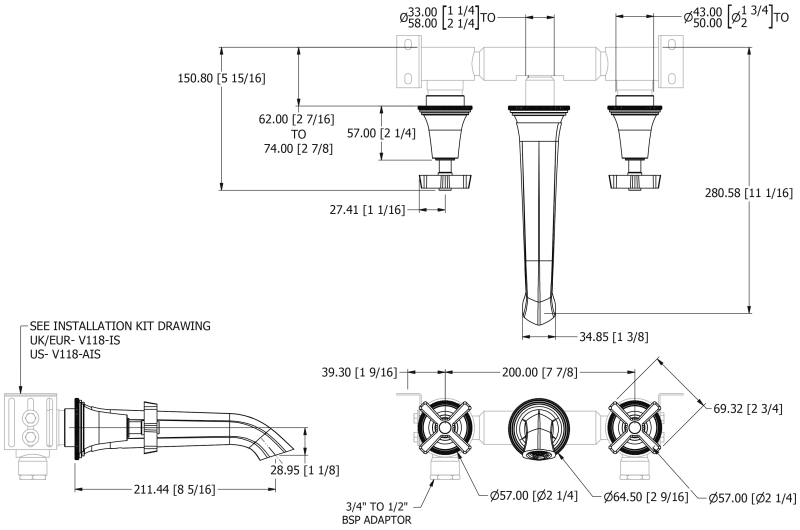

UK Customer Service
Leopold Street
Birmingham
B12 0UJ
Tel: +44 121 766 4200
Email: info@samuel-heath.com

US Customer Service
Federal I.D. No. 58-1504682
Email: usa@samuel-heath.com

Specification Enquiries
Design Centre Chelsea Harbour
1st Floor, North Dome, London
SW10 0XE
Tel: 020 7352 0249
Email: showroom@samuel-heath.com